Memory Functions in Polymer Modified Asphalts

Giovanni Polacco,[1] Jiri Stastna,[2] Peter Michalica,[2] Dario Biondi,[1] Matteo Cantù,[1] Ludovit Zanzotto[2]

[1]*Dipartimento di Ingegneria Chimica, Università di Pisa, Via Diotisalvi 2, 56126-Pisa, Italy*
[2]*Bituminous Materials Chair, Schulich School of Engineering, University of Calgary, 2500 University Drive NW, Calgary, Alberta, Canada T2N 1N4*

Received 12 July 2006; accepted 3 October 2006
DOI 10.1002/app.25713
Published online in Wiley InterScience (www.interscience.wiley.com).

ABSTRACT: The viscoelastic nonlinear behavior of several base and polymer modified asphalts (PMA) has been studied in step-strain experiments. The polymers were poly(styrene-*b*-butadiene-*b*-styrene), poly(styrene-*b*-ethylene-*co*-butylene-*b*-styrene), poly(ethylene-*r*-vinylacetate) copolymers, and a linear low density poly(ethylene), which were chosen as representatives of the main categories of asphalt modifiers. Because of the complexity of the morphological structure of these materials, the relaxation modulus has only partial and qualitative similarities with that of melt or high concentrated solutions of entangled polymeric liquids. No time strain separability can be applied, and the relaxation experiments are conveniently described by means of the memory functions. These have been calculated both via a parametric fitting procedure and by interpolation algorithms. Results are presented, and a correlation between the PMA structure and the corresponding memory function is proposed for the investigated materials. © 2007 Wiley Periodicals, Inc. J Appl Polym Sci 104: 2330–2340, 2007

Key words: memory function; polymer-modified asphalts; relaxation; rheology; interpenetrating networks

INTRODUCTION

Bitumens and asphalts are complex mixtures of organic compounds belonging mainly to the families of aliphatic, aromatic, and naphthenic hydrocarbons; they also contain small quantities of organic acids, bases, and heterocyclic components where nitrogen, oxygen, sulfur, and some metal atoms can be found. Considering that an exact determination of the real asphalt composition is not possible, usually the chemical nature is identified by dividing the molecule into two main groups: maltenes and asphaltenes. The former group can be further subdivided into saturates, resins, and aromatics, being the fractions determined using selective solvents and chromatography.

The main applications of asphalts are in road pavement and waterproofing membranes. In both cases, asphalt is often modified by variable quantities of thermoplastic polymeric materials that significantly change the overall viscoelastic properties. An important requisite of the polymer used for modification is to be sufficiently compatible with the asphalt to avoid risk of phase separation when storage at high temperature is necessary. Moreover, the polymer must be cost effective and not significantly change the viscosity of asphalt in its molten state, so that the existing road-building processes and apparatus can still be used.

From the rheological point of view, asphalt is a viscoelastic material showing high temperature sensitivity. Considering both road application and ''in life'' service, asphalt can be subjected to temperatures ranging from many degrees below zero to about 190–200°C. In such a temperature interval, its behavior changes from that of a glassy solid to a Newtonian liquid. The glass transition region of asphalt usually starts at temperatures of about −20°C, and the Newtonian region may start at temperatures of about 70°C. Conventional asphalt behaves similarly to a low molecular weight polymer[1] and is usually considered as a ''simple'' material, i.e., the time-temperature superposition principle (TTS) applies.[2,3] Therefore, in dynamic experiments (small amplitudes), master curves can be built multiplying the frequency by a horizontal shifting factor, a_T, (sometimes a vertical shift due to thermal expansion is also required). The form of log a_T as a function of temperature is given either by the Arrhenius or Williams–Landel–Ferry relations.[4,5]

With respect to morphological structure, asphalt is considered to have a colloidal nature, in which asphaltenes are covered by a stabilizing phase of polar resins and form complex micelles that are dispersed in the oily maltenic phase.[6] If it is difficult to determine the real internal structure of neat asphalt, the situation is

Correspondence to: G. Polacco (g.polacco@ing.unipi.it).
Contract grant sponsors: Natural Sciences and Engineering Research Council of Canada and Husky Energy Inc.

©2007 Wiley Periodicals, Inc.

further complicated in polymer modified asphalts (PMAs) where the polymer chains create an interpenetrating network swelled by the asphalt molecules. Moreover, the physical (or chemical) interactions between asphalt and polymer redistribute the colloidal equilibrium with respect to the one present before modification. In any case, the ''thermorheologically simple'' behavior is controversial for PMAs,[7] and the TTS does not apply in all blends.

The rheological characterization of asphalts and PMAs in the linear viscoelastic region, usually done in small amplitude shear oscillations, can be useful to evaluate the role of the modifying polymer. In fact, the great majority of the available studies cover the linear viscoelastic region of small deformations or rates of deformation, but it is sometimes difficult to distinguish or to characterize different PMAs in this region. That is why it is necessary to extend the characterization to large deformations. In this respect, the shear viscosity is probably the simplest nonlinear function that can reveal the anomalous behavior of blends of conventional asphalts with polymers. In a previous paper,[8] an extensive analysis was done regarding the viscosity functions for base and polymer-modified asphalts.

Another basic nonlinear rheological test is the step-strain experiment in shear mode. The shear stress relaxation is observed in this test; and, the obtained material function is the relaxation modulus $G = \tau/\gamma$, where τ is the shear stress and γ is the shear strain. The kinematics of the test is described by the relative deformation gradient (gradient of the position at time t' with respect to the position at fixed time t).[9]

$$[\underset{\sim}{F}_t(t')] = \begin{pmatrix} 1 & h(t') - h(t) & 0 \\ 0 & 1 & 0 \\ 0 & 0 & 1 \end{pmatrix} \tag{1}$$

where

$$h(t') = \int_0^{t'} \mathrm{v}'(x_2, \sigma) d\sigma \qquad \mathrm{v}' = \frac{\partial \mathrm{v}}{\partial x_2}$$

is the deformation between time 0 and t'.

Here it is assumed that the flow in the test is a simple shear with the velocity field given by Cartesian vector (v(x_2, t), 0, 0). Cartesian coordinate x_1 is in the direction of the flow, and x_2 is in the direction across the thickness of the sheared sample. Let us assume that the material can be described by Lodge's rubber-like liquid model.[10]

$$\underset{\sim}{\tau}(t) = \int_{-\infty}^{t} M(t - t', I_{\underset{\sim}{C}^{-1}}, II_{\underset{\sim}{C}^{-1}}) \underset{\sim}{C}_t^{-1}(t') dt' \tag{2}$$

where $\underset{\sim}{\tau}$ is the extra stress tensor, M represents the memory function of the material, $\underset{\sim}{C}_t^{-1}(t')$ is the relative Finger tensor,[9,10] and $I_{\underset{\sim}{C}^{-1}}$ and, $II_{\underset{\sim}{C}^{-1}}$ are the first two principal invariants of $\underset{\sim}{C}_t^{-1}(t')$. One can at first write

$$[\underset{\sim}{C}^{-1}(t')] = \begin{pmatrix} 1 + A^2 & -A & 0 \\ -A & 1 & 0 \\ 0 & 0 & 1 \end{pmatrix},$$
$$I_{\underset{\sim}{C}^{-1}} = II_{\underset{\sim}{C}^{-1}} = 3 + A^2,\ A \equiv \gamma(t') - \gamma(t) \tag{3}$$

Then, in the step-strain experiment for $t \in (0, \varepsilon)$, the shear strain changes from 0 to $\gamma(\varepsilon) = \gamma_0$. The constitutive eq. (2) yields ($\tau_{12} \equiv \tau$):

$$\tau = \gamma(t) \int_{-\infty}^{0} M(t - t', \gamma(t)^2) dt' + \int_0^t M(t - t', [\gamma(t) - \gamma(t')]^2)(\gamma(t) - \gamma(t')) dt' \tag{4}$$

and for $t \in (\varepsilon, \infty)$

$$\tau = \gamma_0 \int_{-\infty}^{0} M(t - t', \gamma_0^2) dt' + \int_0^{\varepsilon} M(t - t', [\gamma_0 - \gamma(t')]^2) \times (\gamma_0 - \gamma(t')) dt' \tag{5}$$

It is usually assumed that $\varepsilon \to 0$, then the transient evolution of the shear stress on the time interval $(0,\varepsilon)$ is not experimentally accessible; moreover, the contribution from the second term of the right hand side of (5) can be neglected. In this case, one can write (for $t \in (\varepsilon, \infty)$)

$$\tau(t, \gamma_0) = \gamma_0 \int_1^{\infty} M(s, \gamma_0^2) ds \tag{6}$$

It is possible to define the relaxation modulus:

$$G(t, \gamma_0) = \frac{\tau(t, \gamma_0)}{\gamma_0} \tag{7}$$

related to the memory function, M, as:

$$M(t, \gamma_0^2) = \frac{\partial G(t, \gamma_0)}{\partial t} \tag{8}$$

For small γ_0, the dependence on γ_0 is assumed to be weak and one obtains the linear viscoelastic relaxation modulus and the linear viscoelastic memory function.[5]

Generally, the situation in the step-strain experiment can be more complicated because the strain during the step does not have to be a linear function of the time; here, the shear stress can go through its maximum and the stop at time ε is not really sudden. In another words, the transient process can last longer than the assumed time of the step. This means that the ideal step-strain experiment (in the stress relaxation) can be observed only after some initial time period

($t>\varepsilon$). The described situation may be more pronounced in stress control rheometers. Careful sampling of the data can take care of this problem.

By repeating the step-strain test with various strains, one can construct the nonlinear relaxation modulus, $G(t,\gamma)$, as a function of two variables. The majority of authors treat $G(t,\gamma)$ as a function of time and a parameter γ, i.e., they describe G by a one parametric family of curves $G(t,\gamma)$. Then, there is the vastly studied problem of the separability of G into a product of a function of time only and another function depending on the strain only, i.e., the problem of the damping function. This has been studied extensively, especially in the case of linear entangled polymers,[11–29] both from an experimental and a theoretical point of view. The most studied model is the ''tube model'' by Doi and Edwards[30]; its success is in part due to the fact that it gives a parameter-free prediction for the damping function in good quantitative agreement with a large number of experiments.[31] What has been found is that for many polymeric liquids, there is a characteristic time that separates a fast relaxation process, mainly due to chain retraction, from a slower relaxation due to reptation and where $G(t,\gamma)$ appears to be separable.[31–35]

Another approach is possible. Once the function of two variables, $G(t,\gamma)$, is constructed from experimental data on a discrete grid, $\{t_i, \gamma_i\}$, the surface $G(t,\gamma)$ can be studied both in a nonparametric or parametric way. In nonparametric study, the grid can be interpolated and a smooth surface of $G(t,\gamma)$ (and $M(t,\gamma)$) can be constructed. In the other case, an analytical description of the surfaces must be obtained.

In this study, we used both nonparametric and parametric methods in an attempt to obtain a comprehensive picture of the memory surfaces. As far as the parametric description is concerned, one should use a relatively simple model for $G(t,\gamma)$ and the memory function $M(t,\gamma)$. The linear viscoelastic modulus of all the tested materials can be described by the two stretch exponential modes[36] i.e.

$$G(t) = c\exp\left[-\left(\frac{t}{a}\right)^b\right] + d\exp\left[-\left(\frac{t}{e}\right)^f\right] \tag{9}$$

If each relaxation mode is ''attenuated'' by another simple stretch exponential factor, one can consider the following parametric model of the nonlinear relaxation modulus:

$$G(t,\gamma) = c\exp\left(-\left[\left(\frac{t}{a}\right)^b + \left(\frac{t\gamma^2}{g}\right)^h\right]\right) + d\exp\left(-\left[\left(\frac{t}{e}\right)^f + \left(\frac{t\gamma^2}{i}\right)^j\right]\right) \tag{10}$$

being $a, b, c, d, e, f, g, h, i, j$ the fitting parameters.

In this work, step-strain measurements for different base asphalts and PMAs have been performed. The obtained stress relaxation and corresponding memory surfaces are described, and a comparison between nonparametric and parametric results is presented.

The chosen polymers are representatives of the two main categories used for asphalt modification: thermoplastic elastomers and plastomers. As expected, elastomers can enhance the elastic recovery capacities of the binder, thus reducing the problem of permanent deformations, while plastomers mainly help in reducing deformations under load. The thermoplastic elastomers were styrene-butadiene-styrene (SBS), which is probably the most frequently used polymer in asphalt modification, and also styrene-(ethylene-*co*-butylene)-styrene (SEBS) triblock copolymers.

SBS is a good asphalt modifier because its chemical structure makes it suitable for blending with a fairly large number of asphalt types without serious problems of solubility and phase segregation. However, SBS, like all unsaturated rubbers, is prone to ageing, and this limits the possibility of recycling the end-of-life road pavement. This is why increasing attention is being paid to SEBS, which is obtained by the simple hydrogenation of SBS. However, if on one side, the double bond saturation can solve the ageing problem; on the other side, it strongly reduces the polymer polarity thus lowering the compatibility with asphalts, which is the main reason why the use of SEBS as a modifier for road paving binders is still rather limited. Nevertheless, SEBS remains an interesting material, especially for the production of impermeable membranes where compatibility requirements are less stringent, because the PMA is rapidly cooled just after the mixing procedure and the shear-induced metastable morphology is frozen in.

We used two different plastomers: a random, partially crystalline, ethylene-vinyl acetate copolymer (EVA) widely used for road paving, and a linear low density polyethylene (LLDPE), which due to its nonpolar nature has a very low compatibility with asphalt, and like SEBS can be used mainly for the production of impermeable membranes.

It is important to emphasize that, even if added in moderate quantities (usually 3–6%), the modifying polymers are able to affect the physical and mechanical properties of asphalts significantly, thanks to the common ability of forming interpenetrating networks that include the whole asphaltic material. SBS and SEBS have a two-phase morphology consisting of glassy micro-domains made by polystyrene and connected by the polyolefinic segments. EVA can also form a physical crosslink, where the rigid domains are irregular crystallites made by polyethylene (PE) rich segments of the macromolecules. In fact, the vinyl acetate units introduce structural irregularities; and, by varying the molecular weight and composition of the

copolymer, it is possible to produce materials with a very wide range of properties. Common grades used in asphalt modification are in the range of 18–28% by weight of vinyl acetate, which corresponds to a good balance between the degree of crystallinity and the polarity of the chains. Of course, LLDPE has a high degree of crystallinity and, after blending with asphalt under high shear, tends to segregate quite rapidly into isolated polymeric macrodomains dispersed in the asphaltic matrix as soon as the shear stress of the mixer is removed from the system. However, a PMA with an LLDPE was used because in a previous work[37] we found that, among many tested polyolefins, it gave interesting results. In spite of its very low compatibility, the polymer was found to spread continuously through the asphalt matrix and gave a PMA with mechanical properties that are probably related to the formation of a very low extent of crosslinking between the polymer chains.

MATERIALS AND METHODS

The following asphalts, polymers and PMAs were used in the present work:

- Asphalt from vacuum distillation with 70/100 Pen grade (referred to as asphalt A)—two PMAs were obtained from asphalt A by adding 5.5 and 7.2% (by weight) of radial SBS (referred to as A-SBS5.5 and A-SBS7.2, respectively).
- Asphalt from vacuum distillation with 200/300 Pen grade (referred to as asphalt B)—two PMAs were obtained from asphalt B by adding 6.0 and 8.0% by weight of EVA copolymer (referred to as B-EVA6 and B-EVA8, respectively).
- Asphalt from vacuum distillation with 70/100 Pen grade (referred to as asphalt C)—three PMAs were obtained from asphalt C by adding 2.0, 4.0, and 6.0% (by weight) of LLDPE (referred to as C-PE2, C-PE4, and C-PE6, respectively).
- Asphalt from vacuum distillation with 170/220 Pen grade (referred to as asphalt D)—three PMAs were obtained from asphalt D by adding 2.0, 4.0, and 6.0% by weight of linear SEBS (referred to as D-SEBS2, D-SEBS4, and D-SEBS6 respectively).

where the polymer characteristics are reported in Table I.

The typical mixing procedure was as follows: aluminum cans of approximately 500 cc were filled with 250–260 g of asphalt and put in a thermoelectric heater. When the asphalt temperature reached 180°C, a high shear mixer was dipped into the can and set to about 3000 rpm. The polymer was added gradually (about 5 g per minute), while keeping the temperature within the range of 180 ± 1°C during the polymer addition and the subsequent 1 h of mixing. Finally, the obtained PMA was split in appropriate amounts to prepare samples for characterization. The samples were stored in a refrigerator at −20°C. The dynamic characterization and viscosity functions of some of those PMAs were reported earlier.[8,37–39]

Rheometry

Asphalt samples were poured into rubberized molds before being used for rheological testing. The rheometers were the Rheometric Scientific ARES A-33A, which operates under strain control, and the Stresstech by Rheologica Instruments, which operates under stress control. The test geometries were plate–plate (diameters 20, 25, and 50 mm). Step-strain measurements were conducted isothermally at temperatures between 10 and 50°C, depending on the material stiffness. For a given sample, there is a quite narrow temperature interval where the viscoelastic properties allow successful measurement of the relaxation modulus for different values of the imposed step strain. The material must have a viscosity high enough so that the instrument can reveal the stress even for very low values of the strain (i.e., in the linear interval), but low enough so that no overload of the transducer occurs and that there is no risk of macro-fractures or slipping of the sample for high values of the strain. Slipping is one of the main problems in rheological measurements; and, it is often considered as the first cause of artifacts, especially in the case of step-strain experiments performed on highly entangled polymeric solutions or melts where the so called ''kinked'' behavior of $G(t,\gamma)$ has been observed. In his review, Venerus developed a model of step-strain flow to simulate the

TABLE I
Used Polymers

Copolymer	Trade name	Manufacturer	Density (g/cm^3)	MFI (g/10′) ASTM D 1238	Monomer content (% by weight)
SBS-r	Europrene® SOL T/161 B	Polimeri Europa	–	<1 (190°C/5 kg)	Styrene 30
LLDPE	Flexirene® FF 25	Polimeri Europa	0.921	0.7 (190°C/2.16 kg)	–
EVA	Elvax® 350	DuPont	0.948	19 (190°C/2.16 kg)	Vinyl acetate 25.0
SEBS	Kraton® G 1652	Kraton Polymers	0.910	5 (230°C/5 kg)	Styrene 30

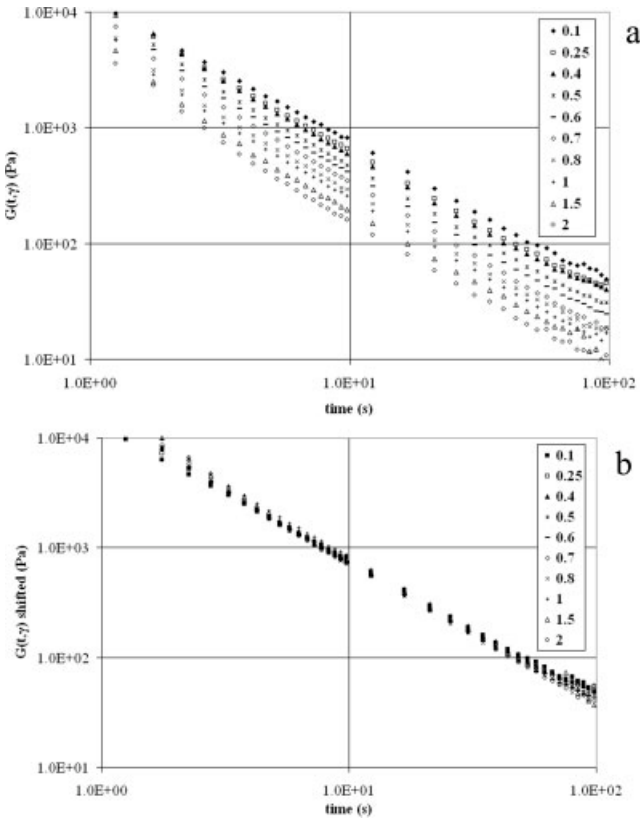

Figure 1 Relaxation modulus of base asphalt A at 20°C for various strains, before (a) and after (b) vertical shift.

effects of artifacts like slip, imperfect step-strain history or transducer compliance.[33] In some cases, a special experimental setup was developed to minimize this problem. For example, a single layer of 1 μm silica glass bead attached to cone and plate surfaces showed to be highly effective for removing measurements errors caused by wall slip.[11,24] In this respect, it is important to underline that in the case of asphaltic binders, there is usually a strong adhesion between the sample and the plate, at least when the material is well above its glass transition temperature. Therefore, it is our opinion that, in the presented results, slip should not to be considered as a significant cause of errors.

RESULTS AND DISCUSSION

Base asphalts

Base asphalts A, B, C, and D were tested without any modifier, and they all gave very similar results. The relaxation modulus $G(t,\gamma)$ is separable as shown (as an illustrative example) in Figure 1(a,b) for asphalt A at 20°C. In this case, a damping function depending only on the strain can be found on almost the whole investigated time interval. For long times, there is an interval where the curves are spread after shift, but this seems to be related to the noise in the measurements at low residual stress values.

Block copolymers as modifiers

The situation changes significantly when analyzing PMAs. PMAs obtained with SBS triblock copolymer as the modifier were prepared with two different polymer percentages: 7.2 and 5.5 by weight. In the first case, measurements are available both at 40 and 50°C, relatively high temperatures, thanks to the fact that the high polymer content makes the material stiff at room temperature. In the case of 5.5%, the most convenient temperature for measurements was found to be 35°C. After mixing at 180°C, the base asphalt and polymer tend to form a stable blend, and in both PMAs the polymer quantity is well above the minimum required for phase inversion. Consequently, at those temperatures, the overall behavior of the PMAs is that of a material with good elastic response.

Starting from A-SBS7.2, the $G(t,\gamma)$ curves for different applied strains at 50 and 40°C are reported in Figure 2(a,b), respectively. At 50°C the relaxation curves decrease in a relatively narrow interval of magnitudes, thus they are not easily distinguishable in the graph. However, as a general trend, the PMA relaxes quite fast at short times. From about 0.1 s, the rate of relaxation decreases and the modulus seems to tend to asymptotic values (as one would expect in cross-

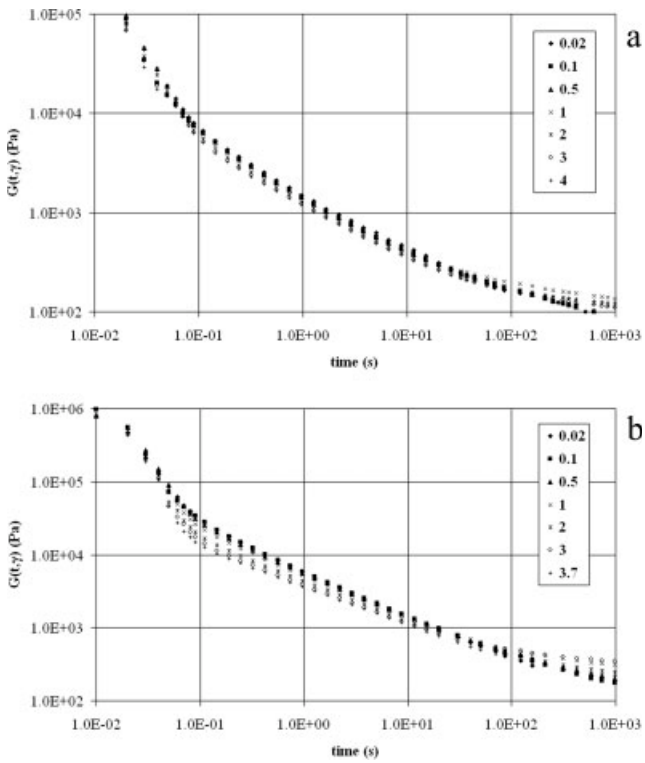

Figure 2 Relaxation modulus of A-SBS7.2 for various strains at 50°C (a) and 40°C (b).

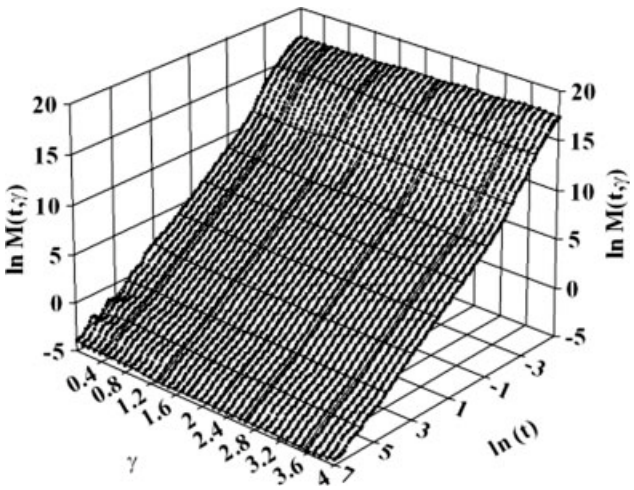

Figure 3 Memory function of ASBS7.2 at 50°C obtained by using the nonuniform rational B-splines (NURBS) algorithm.

linked material). The experimental values of G, as usual, decrease as the step strain increases; however, at longer times the curves tend to cross and an inversion of this trend appears. In fact, at this temperature the PS domains are below their glass transition temperature. The material is soft and no big differences, neither qualitative nor quantitative, are observed with varying the applied strain. In such conditions, a partial time-strain separability can be observed, especially in the time interval 0.1–10 s, where the curves are superposable by applying a small vertical shift.

The behavior is markedly different at 40°C, where it is evident that $G(t,\gamma)$ is not separable at all; and, it is not possible to find even a small time interval where a vertical shift can superpose the curves corresponding to different strains.

In this case, it is useful to have a look at the memory functions. As mentioned in the introduction, these can be obtained by parametric or nonparametric methods. The first method uses interpolation algorithms only; the second method starts with an appropriate function describing (fitting) the experimental data. This function is determined by a set of parameters via an appropriate fitting procedure. Commercial software Tablecurve 3D (TC3D) (SYSTAT Software Inc. Richmond CA, 2002) allows processing of the experimental data via both methods. In the nonparametric method, the data set [ln$G$, ln$t$, γ] was first interpolated to a uniform grid on the (ln$t$,γ) plane by using Renka IIC1 algorithm.[40,41] Since the memory function is given as $-(1/t)\partial G/\partial(\ln t)$, one has to determine the derivative $\partial G/\partial \ln t$ on the prepared grid. Several algorithms for this procedure are available in TC3D. For example, the surface of ln$M$(ln$t$,γ), for the sample A-SBS7.2 at 50°C, was obtained by using the nonuniform rational B-splines (NURBS) algorithm. The surface of ln(M) is of sigmoidal shape as seen in Figure 3, where the nonparametric memory function is fitted to the Sigmoid bivariate series of order 10. Such a fit is, of course, of little practical value since the fitted function is determined by 66 parameters.

In parametric method, we have assumed that the nonlinear relaxation modulus $G(t,\gamma)$ can be described by the relation (10). Once the ten parameters of relation (10) are determined, the memory function is given as $-\partial G/\partial t$. The consistency of both methods was always checked by comparing the memory and relaxation modulus or the stress surfaces obtained with the two methods. It is obvious that the relatively simple relation (10) is not able to give some subtle changes observed on the nonparametric memory surfaces (e.g., small ''ripples''). Of course, in numerical treatment, one can use other parametric models for the relaxation modulus. On the other hand, the general shape of the relaxation modulus (stress) surface was captured by relation (10) relatively well in all of the studied PMA samples. As an example, Figure 4 shows the experimental stress and the corresponding interpolating surface obtained by using eqs. (10) and (7) for ASBS7.2 at 50°C.

The M-surfaces portrayed in Figures 5 and 6 were obtained by the above-mentioned parametric method using relation (10).

Comparing Figures 3 and 5, which represent the same memory function obtained in interpolating and parametric ways, respectively, we can observe quite good quantitative agreement between the two methods. The sigmoidal shape appears to be more pronounced in the case of Figure 5 than in Figure 3. Moreover, as is quite obvious, the parametric form has a more smoothed aspect, and small ripples can be observed for small values of M only in Figure 5.

As shown in Figure 6, at 40°C the surface appears to be more ''flat''; and, at longer times at both temperatures, the material loses memory of the past deformation fast. Going back to Figure 2(a,b), we observed

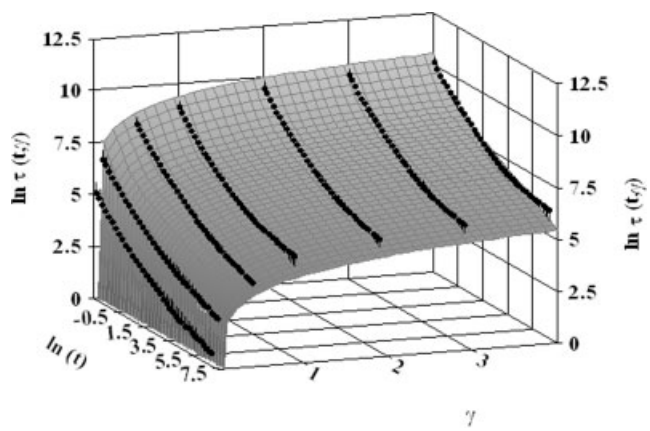

Figure 4 Stress function of ASBS7.2 at 50°C; dots: experimental data, surface: fit by using eqs. (7) and (10).

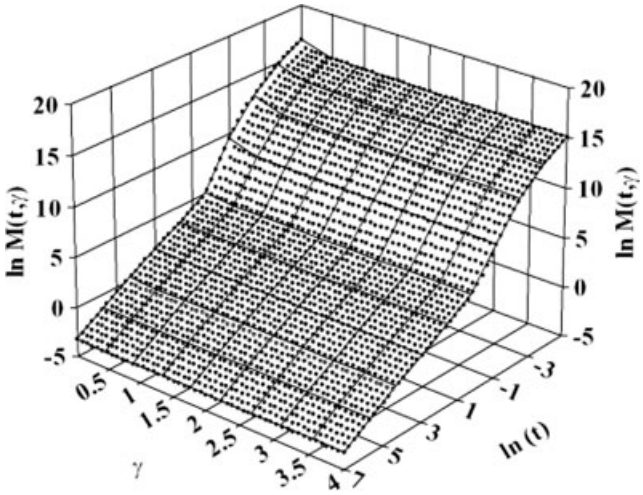

Figure 5 Memory function of ASBS7.2 at 50°C obtained by using eqs. (7) and (10).

that after about 100 s, the curves of G tend to cross so that, at long times, the higher values of the relaxation moduli correspond to the larger step strains. This unusual behavior is quite visible at 40°C, but is also present at 50°C even if less pronounced. A possible explanation can be found in recalling the ''temporary'' nature of the physical network formed by block copolymers when mixed with asphalt.[8] The polystyrene (PS) domains are dispersed in a polybutadiene-rich matrix that is swollen by the asphalt components and allows them a high translational mobility. However, it has to be considered that asphalt is not completely immiscible with those domains, and they are also partially swollen, which causes a lowering of the glass transition temperature of the polydomains, thus favoring an internal chain mobility especially under strong shear. In other words: a small applied strain causes conformational changes of the soft polybutadienic blocks but only a ''rigid'' rearrangement of the polydomains structure, while under a high strain some polystyrenic blocks can also change the position in the domain. In some cases, it can be detached from the domain; and, the polystyrenic block is, therefore, forced to ''jump'' from one domain to another, thus determining a rearrangement of the physical network.

During relaxation, the flexible butadienic segments tend to go back to their equilibrium conformation, but the jumped PS segments remain in their new position. Therefore, the chain cannot go back to the initial conformation, which was reached after cooling from the high temperature of mixing, and some induced internal tension can exists thus preventing a complete relaxation of the material. Of course, the higher the applied strain, the more pronounced is this effect, which cannot be seen in the memory functions, but is more evident if we plot the stress instead of the relaxation modulus (Fig. 4).

From the graph, it can be seen how the family of the stress curves behaves by increasing the applied initial step strain. At a fixed time, for small strains the corresponding stress is small and appears to be still decreasing at the end of the experiment, while for high values of the strain the stress maintains quite a high value, but at the same time it seems to reach a residual asymptotic value. This confirms that the higher the initial strain applied to the sample, the higher is the residual stress.

Sample A-SBS5.5, tested at 35°C, has a shape of the memory function that in linear scale appear**s** qualitatively similar to the one of A-SBS7.2 at 50°C. However, in this sample the family of the $G(t,\gamma)$ curves do not cross at higher values of time, and time-strain separability applies only for time greater than about 10 s. In this case, the memory function is given as $-dG/d\,t^{*}h(\gamma)$ with $h(\gamma)$ lower then 1. The lower polymer concentration corresponds to a lower degree of physical crosslinking and, therefore, to a higher degree of freedom for the flexible butadienic segments. We suppose that in this case the applied strain, even when high, does not cause a significant rearrangement of the PS segments and the material, at least in the final part of the measurement, can relax similarly as in entangled linear polymers.

The overall behavior changes significantly when we consider PMAs obtained with the SEBS copolymer modifier. It has to be remembered that, with this mixture, there is lower compatibility between asphalt and polymer; therefore, with respect to the previous case, the polymer is less dispersed in the asphaltic matrix. Moreover, PMAs obtained with SEBS have an elongation at break smaller than that obtained with SBS and, even if we used soft base asphalt, the material is stiff. The consequence is that the measurements are taken with a maximum strain that is lower than that possible with SBS, because the samples tend to be unstable when subjected to fast deformation. The family of

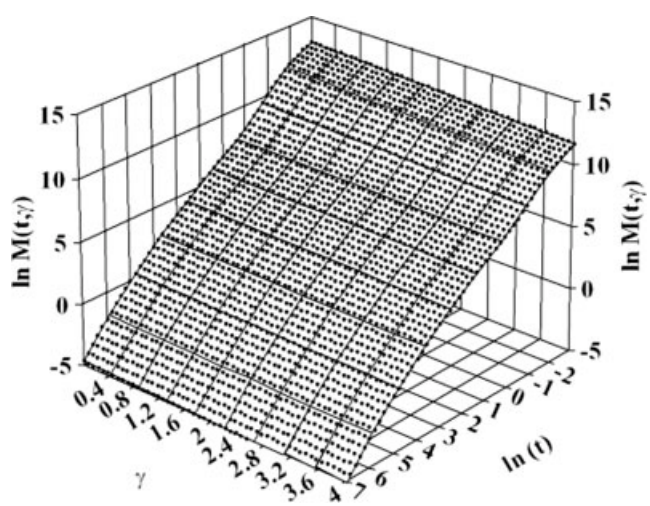

Figure 6 Memory function of ASBS7.2 at 40°C obtained by using eqs. (7) and (10).

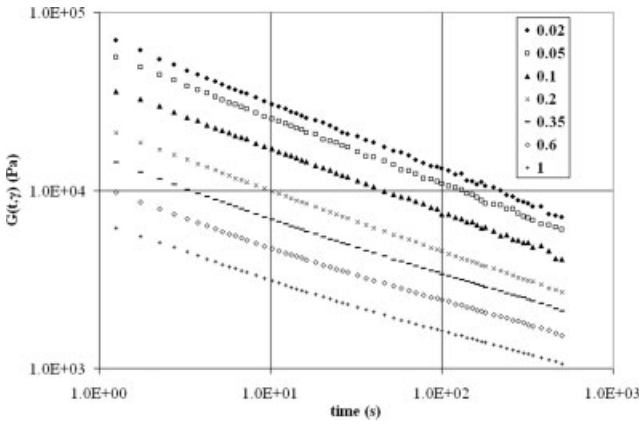

Figure 7 Relaxation modulus of D-SEBS4 at 30°C for various strains.

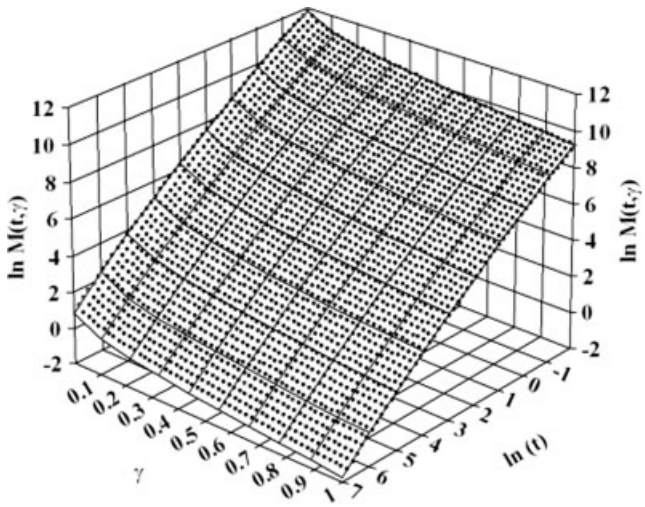

Figure 8 Memory function of D-SEBS4 at 30°C obtained by using eqs. (7) and (10).

$G(t,\gamma)$ curves for the D-SEBS4 sample tested at 30°C is shown in Figure 7.

Similar behavior was observed for other samples of this PMA. The curves are like those classified by Osaki[32] as ''power law'' type, characterized by broad distribution of the long relaxation times. In polymeric liquids, this behavior is related to a wide molecular weight distribution or to the existence of long branches. This appears to be coherent with the above-mentioned characteristics of such materials. The elastic response and recovery are very slow, because the chain rigidity is influenced by the low asphalt compatibility and by the presence of the rigid domains. In the Osaki power law type, however, the power exponent is usually the same for all the curves. This seems not to be the case in Figure 7, where the exact parallelism does not exist, and increases in the step strain correspond to slightly lower rates of decrease of G in the direction of axis t (this is not easily visible from Fig. 7, but emerges quite clearly by applying a vertical shift to the curves).

We cannot exclude that, thanks to physical cross-link, at very long times the curves would not level asymptotically at a value different from zero, showing again the above-described intersection that has been attributed to jump events in the case of SBS modified asphalts.

The memory did not reach very high values for small times and strains (Fig. 8), and the slope in the strain direction is intermediate between those observed in Figures 5 and 6. This can be considered as further indication that a modest quantity of jumps is also present in this case.

Olefinic polymers as modifiers

PMAs blends with EVA random copolymers were prepared in concentrations of 6 and 8% (by weight) and tested at 30 and 35°C, respectively. This polymer still has the ability to create a physical network with thermoplastic properties, where the asphaltic matrix can be dispersed by mixing. In this case, the rigid parts are constituted by semicrystalline domains formed by chain segments rich in ethylene monomeric units. With respect to the polymer properties, EVA has a marked polarity due to the vinyl acetate units and, therefore, a good compatibility with asphalt, which allows the formation of PMAs with quite good storage stability. On the other hand, EVA has less pronounced chain mobility than triblock copolymers, and it is principally used to enhance the resistance of the binder to permanent deformation while it has only small effect on elastic recovery.

The family of $G(t,\gamma)$ curves is reported in Figure 9 for B-EVA8 at 35°C only, but it is qualitatively similar to B-EVA6 at 30°C. The behavior is markedly different from those observed previously. The curves are sigmoidal with a convex shape at small strains, and they are superposable by a small vertical shift at times higher then 0.1 s and lower than 100 s. The overall

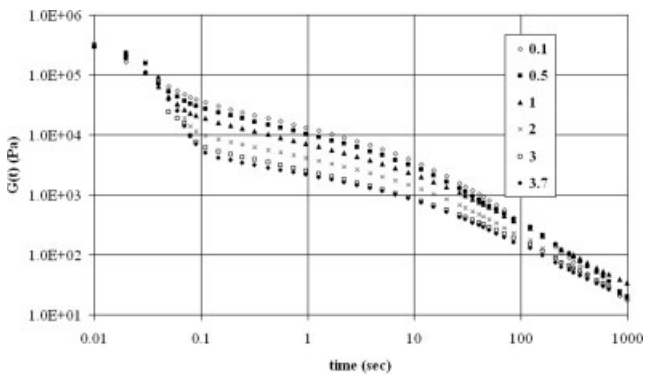

Figure 9 Relaxation modulus of B-EVA8 at 35°C for various strains.

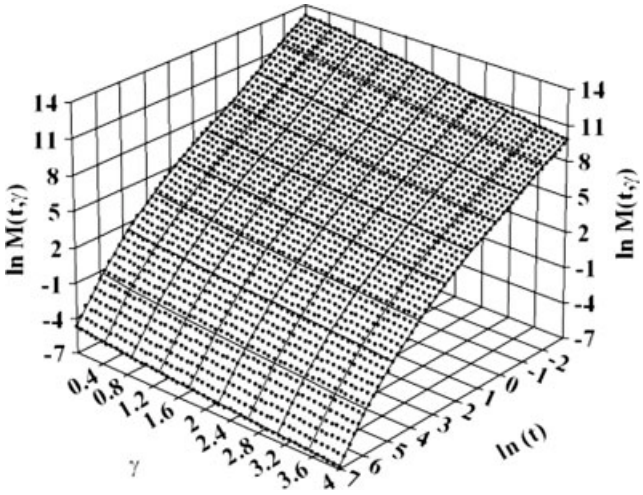

Figure 10 Memory function of B-EVA8 at 35°C obtained by using eqs. (7) and (10).

trend very closely resembles the one classified as ''normal type'' by Osaki,[32] which was observed in linear polymers with sharp or moderate molecular weight distribution and in star-shaped polymers.

In fact, in the case of EVA modified asphalts, the physical network has elastic properties far different from those of triblock copolymers. First of all, the copolymer is random and not in blocks. This implies that the semicrystalline rigid domains are formed by chain segments rich in ethylenic units, which are shorter then the corresponding glassy PS blocks. Moreover, the presence of some vinyl acetate units in those domains enhances the compatibility with polar maltenic molecules, which can closely interact, further disturbing the crystallite regularity. As a consequence, the rigid nodes of the domains are probably quite weak, and this results in a pronounced ''temporary'' nature of the network. On the other hand, the polar interactions that occur between polymer chains reduce the mobility of the polymer chains, and the macroscopic behavior of the modified binder has characteristics similar to those of a dilute linear polymer. With regard to the memory function, B-EVA8 (Fig. 10) is quite similar to A-SBS7.2 at 50°C., If plotted with the linear vertical scale (not reported for the sake of brevity), the surface shows a strong maximum at small times and strains and then tends to decrease very fast because the reduced elastic properties result in a fast fading memory.

The stress relaxation behavior changes dramatically when the modifying polymer is PE. As mentioned above, this polymer has both low compatibility with asphalt and quite high crystallinity. This means that, even after a high shear mixing, it gives a markedly biphasic material when blended with asphalt. The morphology shows macroscopic islands of polymer-rich domains dispersed in the asphaltic matrix. In such domains, there is a residual crystallinity that,

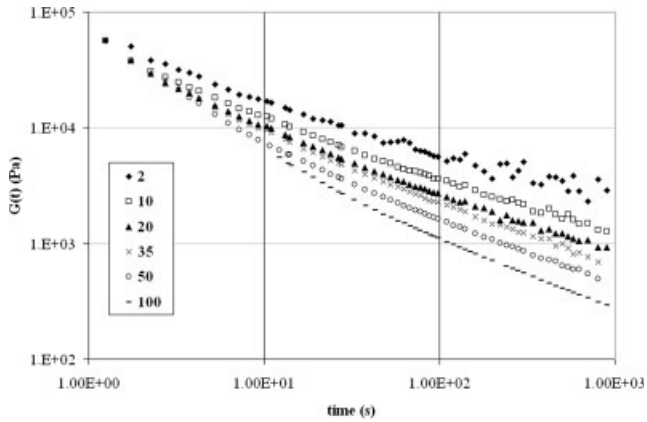

Figure 11 Relaxation modulus of C-PE4 at 35°C for various strains.

due to both the high crystallinity of the homopolymer and the low asphalt-polymer compatibility, is higher than that of EVA-modified asphalt. As a consequence, the polymer chains have a reduced mobility; the PMA is quite stiff; and, there is a relatively low limit to the maximum step strain that can be applied without inducing instability of the sample. The $G(t,\gamma)$ curves have a power law behavior in time, but they do not superpose by vertical shifting for any of the three analyzed samples. The first derivative, with respect to time, now increases with the applied strain. As an example, Figure 11 shows the case of C-PE4.

After 1000 s, the stress is still quite high and the curves confirm the slow kinetic of relaxation. It is interesting to observe that the memory function (Fig. 12) also has a shape different from those previously seen. The maximum at low times and strains is barely visible, because the derivative with respect to strain is very small in the whole range of investigated experimental conditions. This could be due to the fact

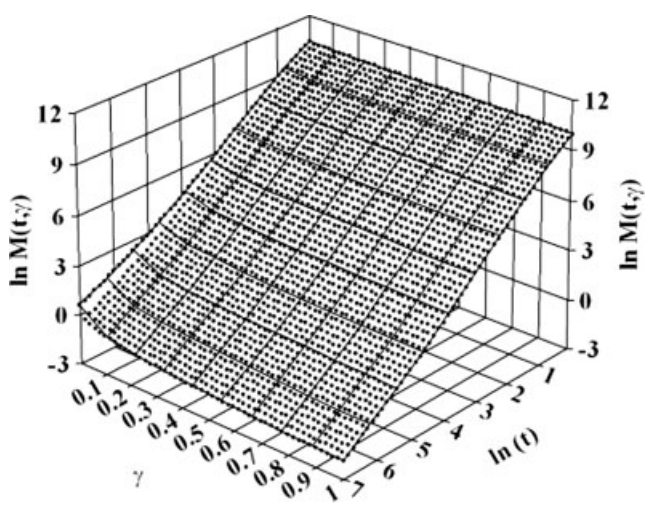

Figure 12 Memory function of C-PE4 at 35°C obtained by using eqs. (7) and (10).

that PE in this PMA has more ''stable'' morphology in the sense of the above-mentioned temporary nature of the polymeric network. In fact, the low solubility and, therefore, the tendency of the polymer to separate means that polymer behaves like a substance between a real modifier and a simple additive. The majority of macromolecular chains are concentrated in polymer-rich zones that remain almost unchanged during the deformation, which is mainly due to rearrangement of these zones in the PMA morphology. There is only a very small quantity of PE chain segments that are really dispersed in the binder and are directly involved in conformational rearrangements, due to the applied strain. Those segments are probably quite short and consequently rigid, due to the constraints exerted by the remaining part of the chain embedded in the polymer-rich domains. As a consequence, no jumps are possible and the material is ''reluctant'' to deform without rearrangement, i.e., the memory of the PMA is ''strong.''

CONCLUSIONS

Step-strain experiments have been performed on a number of base asphalts and polymer-modified asphalts, to enhance the knowledge of the nonlinear viscoelastic behavior of such materials. Depending on their physicochemical characteristics, polymer modifiers give rise to different kind of binders, whose morphological characteristics can only be qualitatively described. In all cases, the materials have a complex structure and both the nature of the polymer and temperature of the measurements strongly affect the shape of the relaxation curves. Some similarities between relaxation moduli of PMAs and of linear entangled liquid polymers have been underlined; however, as a general rule, the time-strain separability for PMAs does not apply or is applicable only in a reduced time interval. Therefore, a damping function depending on strain only does not exist, and the direct study of the memory function may be preferable. Such a function can be determined from a set of experimental data by parametric or nonparametric methods and is usefully represented in a three-dimensional plot together with time and strain.

The shape of both relaxation moduli and memory functions show some peculiarities related to the polymer modifier that can be tentatively correlated to the properties of the three-dimensional network established by the asphalt-swollen polymer. A high compatible triblock copolymer like SBS forms a well known structure with polystyrenic domains acting as a physical bond for the ''liquid'' part of the polymer that is responsible for the high elasticity of the whole PMA. This elasticity is reflected in a memory function that has a large magnitude at low times and then decreases rapidly, with a weak dependence on the initial applied strain. At long times, when there is almost no memory of the past deformation, the residual stress witness the crosslinked nature of the material, while the shape of the relaxation moduli confirms the ''temporary'' nature of the polymeric network, described in a previous work.[8]

If the polymer has similar characteristics, but lower elasticity and lower compatibility with asphalt, as in the case of SEBS, the polymer chains are arranged in an analogous manner as for SBS, but they have reduced mobility and, if compared with the latter, this is reflected in a memory of the material with: (i) a higher dependence on the initial strain; (ii) a lower absolute value of the maximum at short time; and, (iii) a small directional derivatives with respect to time and strain. The lower mobility of the chains is also reflected on the temporary nature of the network, the ''symptoms'' of which are identifiable in the family of relaxation moduli curves.

EVA polymers have a polyolefinic base in which vinyl acetate units are randomly inserted. The presence of this comonomer and its strong interactions with the asphalt molecules disturbs the crystallization ability of the polymer. The result is a material with a polymeric physical network made by pseudocrystalline PE rich domains, interconnected by a matrix of polar chain segments interacting with the asphaltenic and maltenic molecules dispersed in it. These interactions are equivalent to steric impediments for the polymer chains; therefore, the overall behavior qualitatively resembles the one of linear, or star-shaped, liquid entangled polymers. The memory function has a strong maximum at small times and strains, and then decreases very fast, as expected in systems with reduced elastic properties.

Finally, PE modified asphalts have a peculiar structure, where the physical network is dominated by the rigid domains and only a small part of the chains (probably quite short ones) represents the interconnections. The material is, therefore, very stiff and the polymeric network does not have a temporary nature at all. Only small instantaneous deformations can be imposed without inducing macroscopic damages in the sample, which has a long-time memory and is almost strain-independent.

References

1. Brodnyan, J. G.; Gaskin, F. H.; Philippoff, W.; Lendart E. G. Trans Soc Rheol 1958, 2, 285.
2. Christensen, D. W., Jr.; Anderson, D. A. Proc AAPT 1992, 61, 67.
3. Stastna, J.; Zanzotto, L.; Vacin, O. J Appl Rheol 2000, 10, 134.
4. Dealy, J. M.; Wissbrun, K. F. Melt Rheology and Its Role in Plastics Processing; Kluwer Academic: Dordrecht, The Netherlands, 1999.
5. Ferry, J. D. Viscoelastic Properties of Polymers; Wiley: New York, 1980.

6. Read, J.; Whiteoak, D. The Shell Bitumen Handbook, 5th ed.; Thomas Telford: London, 2003.
7. Lesueur, D.; Gerrard, J. F.; Claudy, P.; Letoffe, J. M.; Planche, J. P.; Martin, D. J Rheol 1996, 40, 813.
8. Polacco, G.; Stastna, J.; Vlachovicova, Z.; Biondi, D.; Zanzotto, L. Polym Eng Sci 2004, 44, 2185.
9. Truesdell, C.; Noll, W. In Encyclopedia of Physics, Vol. 3; Springer: New York, 1965.
10. Lodge, A. S. Elastic Liquids; Academic Press, London, 1964.
11. Archer, L. A.; Juliani. Macromolecules 2004, 37, 1076.
12. Archer, L. A.; Sanchez-Reyes, J.; Juliani. Macromolecules 2002, 35, 10216.
13. Aoki, Y.; Hatano, A. Macromolecules 2001, 34, 3100.
14. Inoue, T.; Uematsu, T.; Yamashita, Y.; Osaki, K. Macromolecules 2002, 35, 4718.
15. Inoue, T.; Osaki, K. J Soc Rheol Jpn 2003, 31, 207.
16. Isono, Y.; Nishitake, T. Polymer 1995, 36, 1635.
17. Matsumya, Y.; Watanabe, H. Macromolecules 2004, 37, 9861.
18. Mackley, M. R.; Marshall, R. T. J.; Smeulders, J. B. A. F.; Zaho, F. D. Chem Eng Sci 1994, 49, 2551.
19. Te Nijenhus, K.; Verbraak, C. L. J. A. J Non-Newtonian Fluid Mech 1988, 30, 355.
20. Osaki, K.; Kurata, M. Macromolecules 1980, 13, 671.
21. Osaki, K.; Nishizawa, K.; Kurata, M. Macromolecules 1982, 15, 1068.
22. Osaki, K.; Takatoryi, E.; Kurata, M.; Watanabe, H.; Yoshida, H.; Kodaka, T. Macromolecules 1990, 23, 4392.
23. Osaki, K.; Watanabe, H.; Inoue, T. Macromolecules 1996, 29, 3611.
24. Sanchez-Reyes, J; Archer, L. A. Macromolecules 2002, 35, 5194.
25. Venerus, D. C.; Tariq, S. A.; Bernstein, B. J Non-Newtonian Fluid Mech 1993, 49, 299.
26. Rubio, P.; Wagner, M. H. J Non-Newtonian Fluid Mech 2000, 92, 245.
27. Takahashi, T.; Takimoto, J.; Koyama, K. J Appl Polym Sci 1998, 69, 1768.
28. Watanabe, H.; Sato, T.; Osaki, K. Macromolecules 1996, 29, 3890.
29. Ye, X.; Sridhar, T. Macromolecules 2005, 38, 3442.
30. Doi, M.; Edwards, S. F. The Theory of Polymer Dynamics; Oxford University Press: Oxford, 1986.
31. McLeish, T. C. B. Adv Phys 2002, 51, 1379.
32. Osaki, K. Rheol Acta 1993, 32, 429.
33. Venerus, D. C. J Rheol 2005, 49, 277.
34. Watanabe, H. Prog Polym Sci 1999, 24, 1253.
35. Watanabe, H. J Non-Newtonian Fluid Mech 1999, 82, 315.
36. Kohlrausch, F. Pogg Ann Phys 1876, 8, 337.
37. Polacco, G.; Berlincioni, S.; Biondi, D.; Stastna, J.; Zanzotto, L. Eur Polym J 2005, 41, 2831.
38. Polacco, G.; Stastna, J.; Biondi, D.; Vlachovicova, Z.; Zanzotto, L.; Magagnini, P. Macromol Symp 2005, 228, 41.
39. Polacco, G.; Muscente, A.; Biondi D.; Santini, S. Eur Polym J 2006, 42, 1113.
40. Renka, R. ACM Trans Math Software 1988, 14, 139.
41. Renka, R. ACM Trans Math Software 1988, 14, 149.